Moisture-Sense USER'S GUIDE

Document No: MOISTURE-SENSE-2021

October 2021

AQUANTIS

Inline Quality Control Measurements

1 Contact information

Aquantis S.A.
EPFL Innovation Park Bâtiment C
CH-1015 Lausanne
Switzerland
Tel: +41 79 159 97 25
E-mail : info@aquantis.org
Website : www.aquantis.org

Aquantis Belgium B.V.B.A.
Generaal De Wittelaan 17C
B-2800 Mechelen
Belgium
Tel: +32 15 68 24 21

Contents

2 Quick Start: Calibration and Start up

The quick start requires the sensor to be correctly installed according to the guidelines in section 7. The sensor can initialized as following:

1. Open the *Logging Center* on the web interface using the assigned IP address.
2. Ensure the conveyor belt is emptied, clean and dry. Select and follow the instructions of the thickness sensor calibration wizard (see section 8.3.1.2).
3. Ensure the conveyor belt is emptied, clean and dry. Next, calibrate the sensor via the NO PRODUCT button (see section 8.3.1.3).
4. Once the system is set up, go to logging centre and switch on the data acquisition by clicking on the logging button ⏻ (see section 8.3.1.1**Error! Reference source not found.**). At this moment, the data is recorded and saved in .txt files. The directory gives you access to the files and allows you to open them.
5. To stop the data acquisition function, re-click on the logging button ⏻.

3 About the user guide

3.1 Introduction

The Moisture-Sense is intended to continuously monitor the moisture or dry matter of French fries and potato-related products. This device is developed and manufactured by Aquantis. The product number is indicated on the device and has the format: AQMS-XX-2021-X. Please provide the product number during every communication with Aquantis.

This user's guide is intended for the personnel in charge of the process and quality control of frozen products and/or freezing or thawing processes. When using the Moisture-Sense according to the user's guide, no specific qualifications are required to operate the system. Read this user guide carefully since the installation and operation in accordance with these instructions is a prerequisite for proper functioning of the Moisture-Sense sensor.

The pictures in the user guide are for illustrative purposes only. The illustrations can differ in minor details from your sensor, they are only intended to provide general information. Aquantis pursues a policy of ongoing product development with all sensors. Changes in terms of supply scope are possible at any time with regards to design, features and technology. The information listed in this user guide corresponds to the information available at the time of going to press. Therefore, legal claims cannot be made based on the technical data, illustrations and information contained in the user guide.

The following nomenclature will help when reading this user guide.

3.2 Nomenclature

BMU	bottom measurement unit: emitter of receiver unit placed underneath the conveyor belt
CSV	comma separated values
dB	decibels
EM(W)	electromagnetic (waves)
GHz-waves	electromagnetic waves in the GHz frequency range
HF	high frequency, typically referring to the GHz frequency range
LF	low frequency
TMU	top measurement unit: emitter of receiver unit placed above the conveyor belt

3.3 Publication

Manual version 1.0 with Document No: MOISTURE-SENSE2021-1 was published on May 1st, 2021.

3.4 Additional Documents

Additional documents for the MOISTURE-SENSE include:

- MOISTURE-SENSE Fabrication Instructions (Document No: MOISTURE-SENSE-2021-FAB-1): Protocol for fabrication, adjustments and testing the Moisture-Sense including its different components. This document is solely meant MOISTURE-SENSE manufacturers.
- MOISTURE-SENSE Bill of Materials (Document No: MOISTURE-SENSE-2021-BOM-1): Overview of the components used in the Moisture-Sense. This document is solely meant MOISTURE-SENSE manufacturers.
- MOISTURE-SENSE Product Label (Document No: MOISTURE-SENSE-2021-LABEL-1): The label can be found on the product.

4 Disclaimer

In no respect shall Aquantis incur any liability for any damages, including, but limited to, direct, indirect, special, or consequential damages arising out of, resulting from, or any way connected to the use of the sensor, whether or not based upon warranty, contract, tort, or otherwise; whether or not injury was sustained by persons or property or otherwise; and whether or not loss was sustained from, or arose out of, the results of, the item, or any services that may be provided by Aquantis.

5 Safety information

This sensor has been designed for save use but must be operated with caution. If used properly according to this user's guide, the Moisture-Sense poses no health concerns for the personnel.

5.1 General safety instructions

- Check the voltage rating before you connect the equipment to an electrical power source to ensure that the required voltage and frequency match the available power source.
- Do not connect the equipment power cables the power outlet if the power cable is damaged.
- If you use an extension power cable, ensure that the total ampere rating of the products plugged in to the extension power cable does not exceed the ampere rating of the extension cable.

WARNING: The customer is responsible to connect all metal parts of the Moisture-Sense to protective earth via a low resistive path (< 1 Ohm).

WARNING: A minimum distance of 1 meter from the emitter unit should be respected to stay within the maximum electromagnetic exposure limit.

CAUTION: If any smoke or unusual odours are detected, disconnect the device from the electrical outlet and contact Aquantis immediately. See page 2 for the appropriate contact information.

5.2 Laser classification (Class II)

The Moisture-Sense sensor system includes a visible class 2 laser for measuring the product (layer) thickness. The laser-beam is normally pointed downwards to the conveyor belt on which the products pass. Do not stare into the beam or direct the beam to anyone's eyes.

WARNING: Do not directly view or point the laser pointer at an eye. Low power visible lasers do not normally present a hazard but may present potential for hazard if viewed directly for extended periods of time.

5.3 Safe sensor usage

The Moisture-Sense system is designed for use in industrial environments

- Measure the moisture or dry matter content of layers of French fries and other potato-related products on a conveyor belt.
- Measure thickness of layers of French fries and other potato-related products on a conveyor belt.
- Measure surface temperature of layers of French fries and other potato-related products on a conveyor belt.

No other uses are permitted.

Prohibited sensor uses include:

- Compromising or deactivating safety systems built into the sensor
- Removal of hazard or explanatory labels affixed to the sensor
- Opening the sensors enclosure (during operation or cleaning)
- Modifying or converting the instrument
- Using third party accessories

Notices:

- Avoid shocks and impacts to the sensor.
- Protect the sensor cables against damage.
- Avoid exposure of sensor to aggressive media.
- Mount the sensor only by means of the foreseen mounting spaces according to the installation guidelines.

6 Transport and storage

6.1 Transport

For your own safety and to avoid damage to the sensor due to improper transport, respect the following considerations:

- Transport should be performed by trained specialist staff only.
- The utmost care and attention are required at all times during unloading and transportation on company premises.

Do not remove packaging until immediately before you start the installation.

6.2 Transport inspection

Upon receipt, please check the delivery for completeness and for any damage that may have occurred in transit. In the case of transit damage that is visible externally, proceed as follows:

- Do not accept the delivery or only do so conditionally.
- Note the scope of damage on the transport documents or on the transport company's delivery note.
- Contact Aquantis.

Complaints regarding defects should be filed as soon as these are detected. Damage claims are only valid before the applicable complaint deadlines.

6.3 Storage

Store the sensor under the following conditions:

- Do not store outdoors.
- Store in a dry area that is protected from water and dust.
- Do not expose to any aggressive substances.
- Protect from sunlight.
- Avoid mechanical shocks.
- Storage temperature: between –40 and +40 °C
- Relative humidity: max. 95%, non-condensing
- For storage periods of longer than 3 months, check the general condition of the individual units and packaging on a regular basis.

7 Sensor installation and calibration

7.1 Installation guidelines

The installation will be conducted by Aquantis engineers or Aquantis-certified engineers. Therefore, no specific tools nor materials will be provided. Calibration of the sensor can be conducted with included calibration kit.

WARNING: The customer is responsible to connect all metal parts of the system to protective earth via a low resistive path (< 1 Ohm). Aquantis is not responsible for any damage or dysregulation of the system and other equipment due to no or a bad connection to earth.

The best sensor performance can be achieved by following these installation guidelines:

- ✓ The conveyor belt material should be transparent for microwaves. The insertion loss caused by the belt cannot exceed 3 dB. Most plastic conveyor belt materials comply with this requirement, metal conveyor belts don't.

- ✓ The Plow (HF emitter) is mounted 10 cm above the conveyor belt. The HF receiver is placed underneath the conveyor belt, well aligned with the emitter as shown in Figure 1**Error! Reference source not found.**). It is strongly recommended to have as few as possible metal parts near the electromagnetic-axis. The distance between the emitter and receiver (from antenna cover – to – antenna cover) should be kept to a minimum. Foresee sufficient margin (> 2 cm) such that under all conditions moving parts are not touching the instrument.

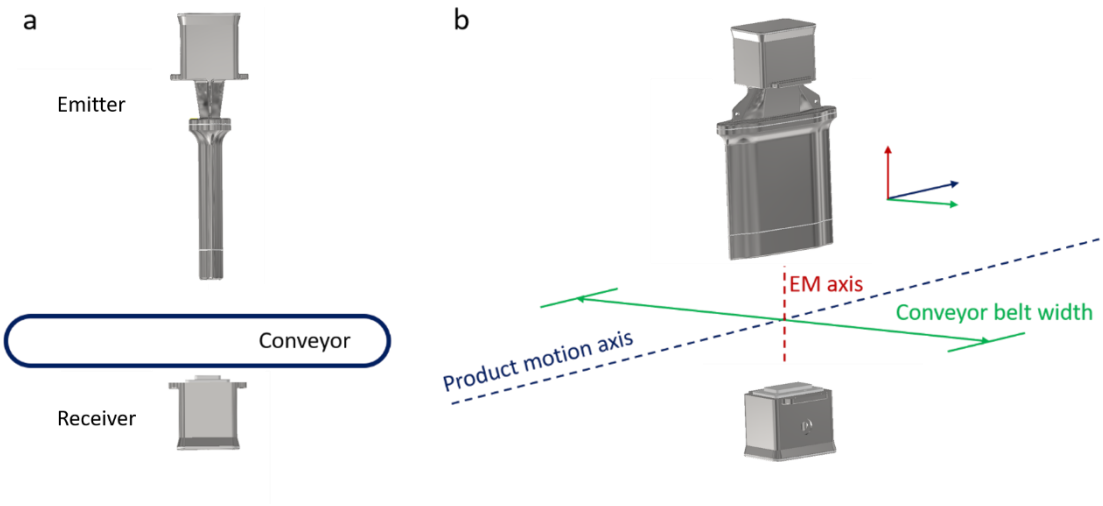

FIGURE 1: STAINLESS STEEL BASE PLATE FOR MOUNTING THE SENSOR MODULE AND THICKNESS SENSOR.

- ✓ Please foresee free space (minimum 50 cm) around the top measurement unit (TMU) to facilitate the installation of the product-thickness sensor and infrared temperature sensor at the antenna side as indicated in Figure 2.

- ✓ Mount the computational unit in the vicinity of the TMU and BMU with the cable glands pointed towards the floor. Please foresee a save and easy access to the TMU, BMU and the computational unit to facilitate the maintenance on the Moisture-Sense system.

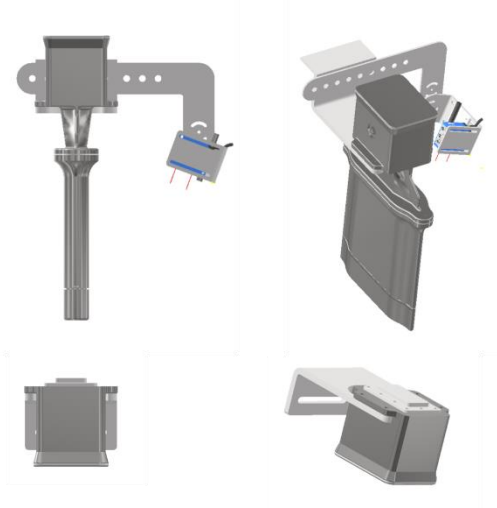

FIGURE 2: STAINLESS STEEL BASE PLATE FOR MOUNTING THE SENSOR MODULE AND THICKNESS SENSOR.

- ✓ The conveyor belt thickness at the electromagnetic-axis should be constant (toothed sections of the conveyor belt should not be placed in the EM field-of-view).
- ✓ The emitter, receiver and the computational unit should be mounted rigidly on a frame limiting any vibrations as much as possible.
- ✓ Make sure there are no other devices operating in the same frequency range: 2.4-2.5 GHz and 5.725-5.875 GHz such as Wi-Fi routers or extenders. Respect a distance of 1 m from the Moisture-Sense system.
- ✓ The cable distance between the computer-box and the HF units may not be longer than 3 m. Cables longer that 3 will compromise the data acquisition speed.
- ✓ For typical product thicknesses, the laser-spot of the thickness sensor should preferentially intersect with the EM-axis at the top surface of the product. See Figure 3 for details.

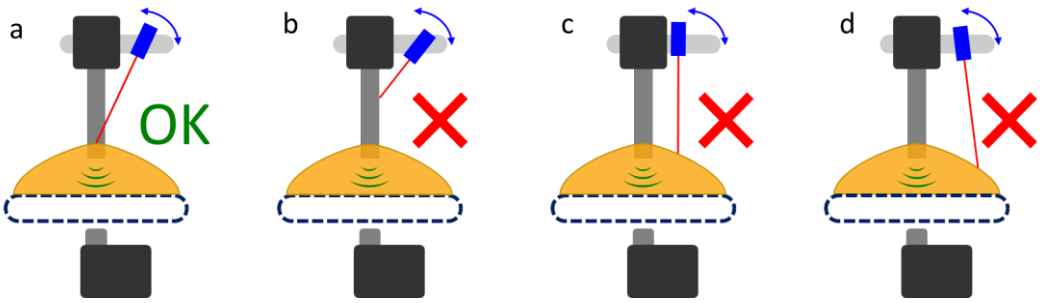

FIGURE 3: POSITIONING OF THE THICKNESS SENSOR: CROSS SECTION (FRONT VIEW) A SHOWS CORRECTLY MOUNTED DISTANCE SENSORS. THE LASER POINT OF THE DISTANCE SENSOR IS POINTED AT THE CENTRE REGION OF THE PRODUCT. SECTION B, C AND D SHOW THE INAPPROPRIATE POSITIONING OF THE DISTANCE WHICH RESULTS IN WRONG MEASUREMENTS.

7.2 Power supply cables

External power connection

The Moisture-Sense is powered via the computer unit which further distributes the power to the distance sensor, infrared temperature sensor, emitter and receiver units. Figure 4 shows the incoming power (red) and the distribution links (blue). Please connect the main power to a single 230 VAC – 50 Hz power source with an external switch or remote relay controlled via a PLC. The power distribution to the distance sensor is already foreseen.

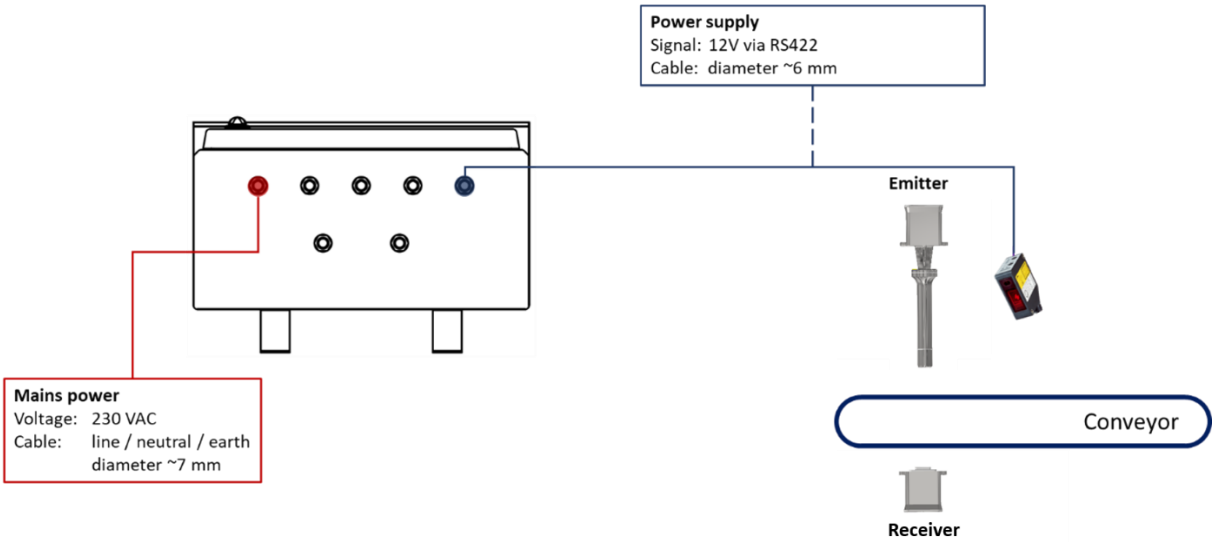

FIGURE 4: POWER SUPPLY INTERCONNECTIONS.

Internal power connection

In case own electrical cables are used to power the unit, the cable can be connected inside the computing unit. The Line, Neutral and Earth connections should be made to the corresponding inputs of the EMI Filter located in the right side of the computing box.

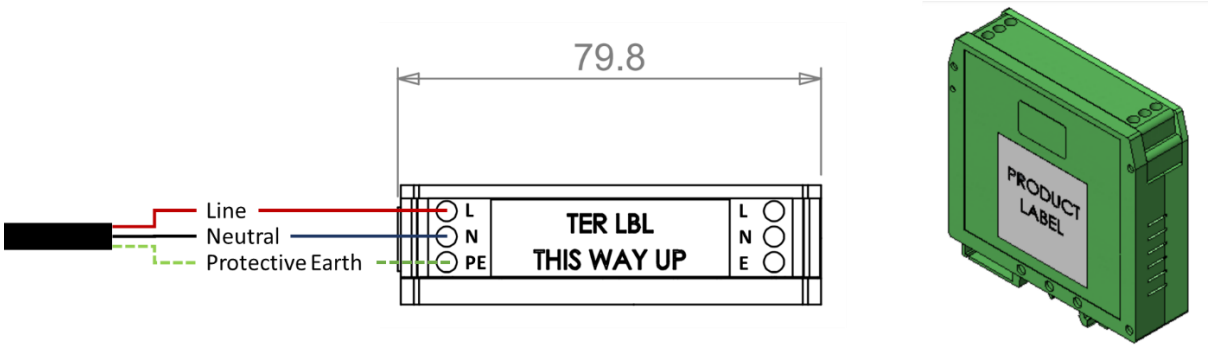

FIGURE 5: EMI FILTER CONNECTION.

7.3 Data interconnection

The data streams between the computer unit, distance sensor, infrared temperature sensor, emitter and receiver units are shown in Figure 6. From the computing unit, an ethernet cable which can be directly connected to a pc or a network. More information can be found in the next section *Connectivity*.

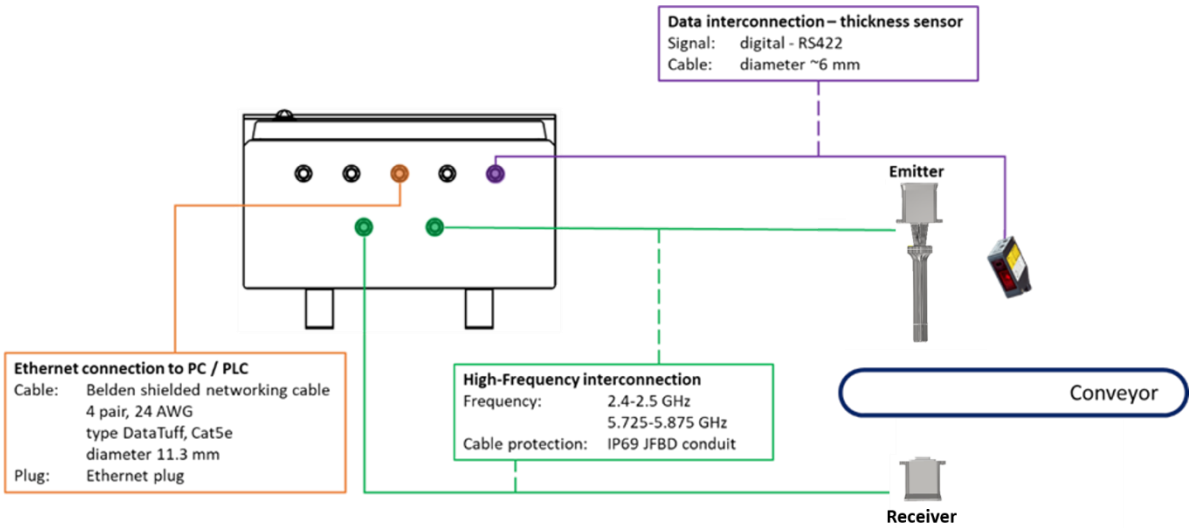

FIGURE 6: DATA SIGNAL INTERCONNECTIONS.

8 Operation

8.1 Sensor power-on and shutdown

Power on

The Moisture-Sense is switched on by plugging the power cord in a socket or by supplying the power via the PLC system. The sensors operating system boots up automatically upon switching on. This start-up phase takes a few minutes. If the system doesn't respond, proceed to section Unexpected stop and restart 10.1 Unexpected stop and restart.

CAUTION: If any smoke or unusual odours are detected, disconnect the device from the electrical outlet and contact Aquantis immediately. See page 2 for the appropriate contact information.

Shutdown

The Moisture-Sense sensors software needs to be shutdown properly prior to cut off its mains power. The system is turned off via the webserver's shutdown-button of by writing a "0" to the Modbus holding register 11. Ensure that the sensor mains power is kept on for at least 2 min after the shutdown process is initiated. Incorrect closing may affect the proper functioning of the device. In case the power is switched off too early, check on the next start up if the software boots up and functions normally.

FIGURE 7: WEBSERVERS MENU: SHUTDOWN BUTTON.

8.2 Connectivity

Connecting to the sensor via a PC

8.2.1.1 Via an Ethernet cable

The Moisture-Sense can be directly connected to a PC by means of the Ethernet RJ45 connector. The industrial PC inside the computational box has two ethernet ports as shown in Figure 8. The IP address of port 1 is set to a fixed IP address 192.168.3.100. Port 2 (near HDMI where ethernet cable is connected) can be set to a fixed IP address specified by the user.

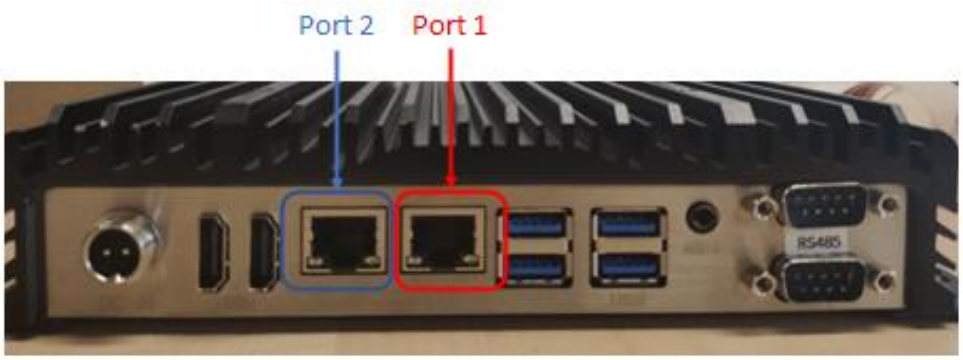

FIGURE 8: ETHERNET PORTS OF THE INDUSTRIAL PC.
PORT 1 HAS THE FIXED IP ADDRESS, PORT 2 CAN BE SPECIFIED BY THE USER.

The sensor can then be interfaced via a web browser or dedicated PLC emulation software making use of the MODBUS TCP protocol.

For direct interconnection to a windows PC, a fixed IP address need to be used: 192.168.3.100 **or IP previously specified by the user**. To do so, one need to change the Ethernet adaptor settings of the Windows PC (that is going to be connected to the sensor) as follows:

STEP 1: Open the "**Network and sharing centre**".

STEP 2: Select "**change adaptor settings**".

STEP 3: Select the Ethernet connection to which the sensor will be connected to the PC. Right-click on the connection and select **properties** from the drop-down menu.

STEP 4: Under the tab "Networking", select **Internet protocol version 4 (TCP/IPv4)**, then select **properties**.

STEP 5: Set the settings as indicated in Figure 9 and press OK.

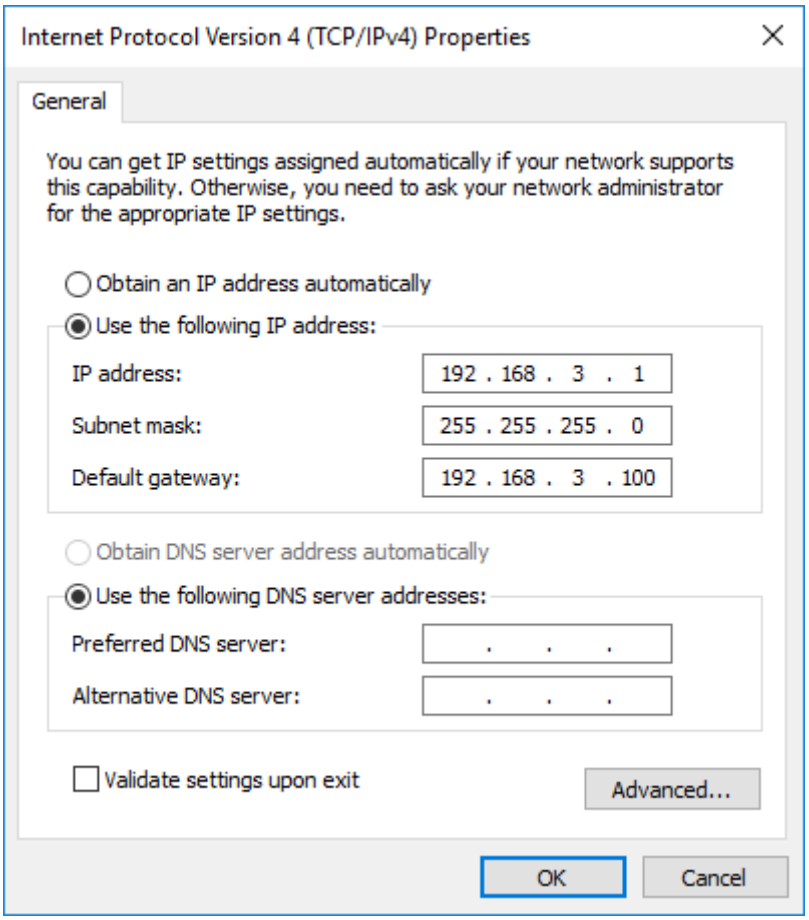

FIGURE 9: IP SETTINGS FOR DIRECT CONNECTION TO THE SENSOR.

STEP 6: Connect the sensor to your PC, open a web browser and navigate to http://192.168.3.100.

STEP7: Congratulations, you are now connected to the sensor.

8.2.1.2 Via the Wi-Fi hotspot

The CALLIFREEZE® can also be connected via the mobile Wi-Fi hotspot. The hotspot can be found as a Wi-Fi network named according to its serial number AQFS-TS1-IR1-DP-V2-XXXX-Y. The XXXX represents the year and Y the sensor number. Once connected, the web interface can be opened via 192.168.4.200 (**Password:** AquantisMoistureSense). Just as described in the previous section, the IP address of Port 2 can be changed.

8.3 User Interface

The Aquantis Moisture-Sense can be interfaced in via:

- ✓ Webserver interface (read & write)
- ✓ Modbus TCP/IP (read & write)

Webserver interface

Note: it is advised to make use of Google Chrome version 70.x or later for consulting the sensors webpages.

The web page structure

- Logging Center [password protected – read/write]
- Settings [password protected – read/write]
- About [freely accessible - read only]
- Shutdown

8.3.1.1 Logging Center

The logging center is used for data logging, visualization and calibration of the sensor. The details are explained in Figure 10.

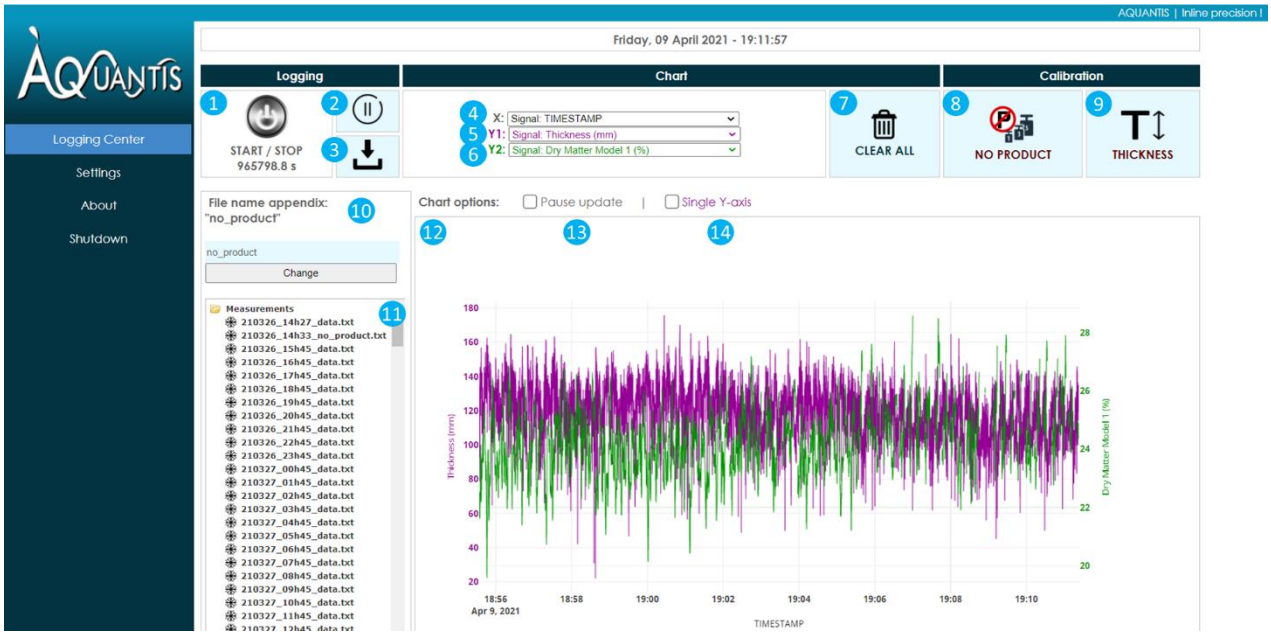

FIGURE 10: LOGGING CENTER

1. START / STOP: Start and stop of the data acquisition.
2. Pause the measurement.
3. Download the data in the form of .txt files.
4. X: Set the parameter of the horizontal axis.
5. Y1: Set the parameters of the vertical axes with Y1 on the left side on the graph.
6. Y2: Set the parameters of the vertical axes with Y2 on the right side on the graph.
7. CLEAR ALL: Clears the graph without removing the current acquisition data.
8. CALIBRATION: Calibrates the system without the product to correct for dirt or condensation on the conveyor belt.
9. CALIBRATION: Calibrates the thickness sensor via the wizard (see section 8.3.1.2).
10. FILE NAMING: Used for naming the files which already contain an initial date and time stamp.

11. FILE TREE: The file tree allows to display the data files. Note that new data files might only be visible after refreshing the directory tree by closing and opening the "*Measurements*" directory.
12. CHART: Chart displaying the data points.
13. Pause update: The chart can be paused temporarily to allow zooming or other actions. The data acquisition continues in the background. Once unticked, all data is displayed.
14. Single Y-axis: The single axis option allows to have a single axis.

8.3.1.2 Thickness sensor calibration wizard

Protection level: password protected.

The product thickness sensor calibration wizard starts with an introduction describing the prerequisites that needs to be fulfilled prior to continue with the thickness calibration procedure as illustrated in Figure 11. The product thickness sensor calibration procedure requires one or two non-transparent reference objects with known thicknesses. The first and the second reference object should be, respectively, thicker and thinner that the product thickness on the production line.

The calibration procedure is initiated by selecting the appropriate sensor configuration: products on conveyor or products in free-fall.

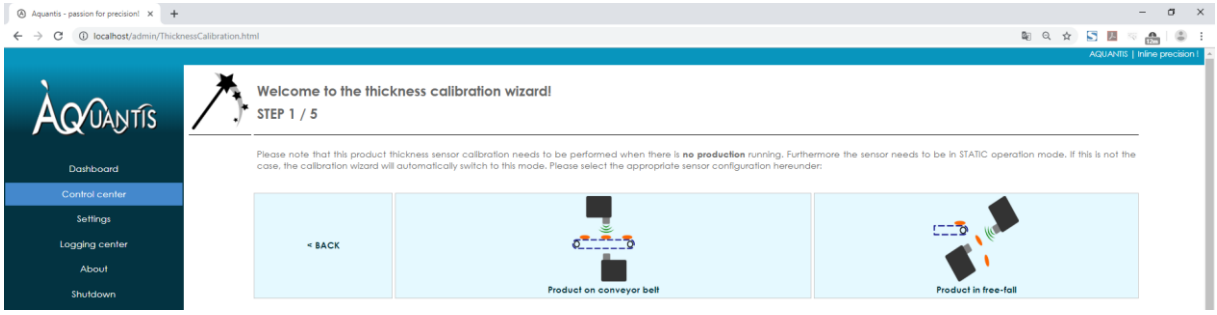

FIGURE 11: THICKNESS SENSOR CALIBRATION WIZARD - SENSOR CONFIGURATION.

Next, one need to place a first non-transparent reference object (with known thickness) on the conveyor belt in front of the sensor such that the red laser-spot is clearly visible on the top surface of the object. This is illustrated in Figure 12.

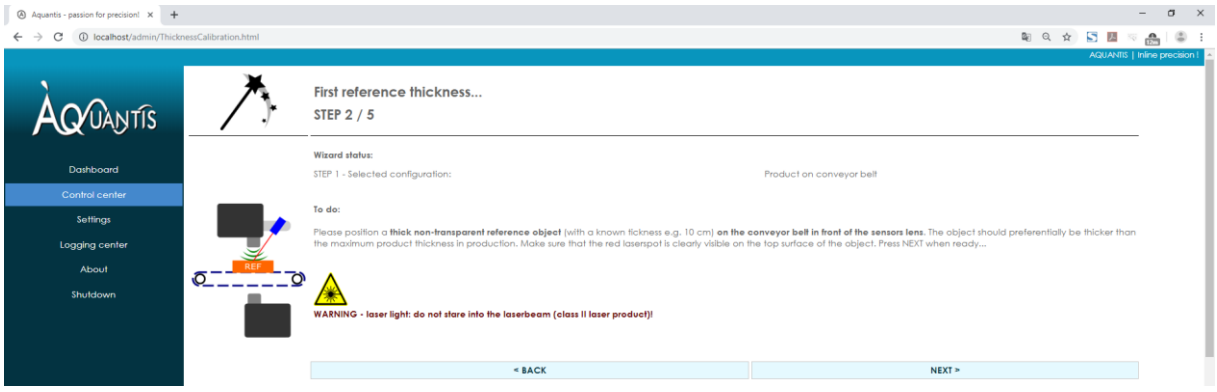

FIGURE 12: THICKNESS SENSOR CALIBRATION WIZARD - REFERENCE 1.

Next, the exact thickness of the reference object needs to be provided in mm with a precision of 1 digit after the comma. The same procedure is repeated for the second reference object (see Figure 13 - Figure 15).

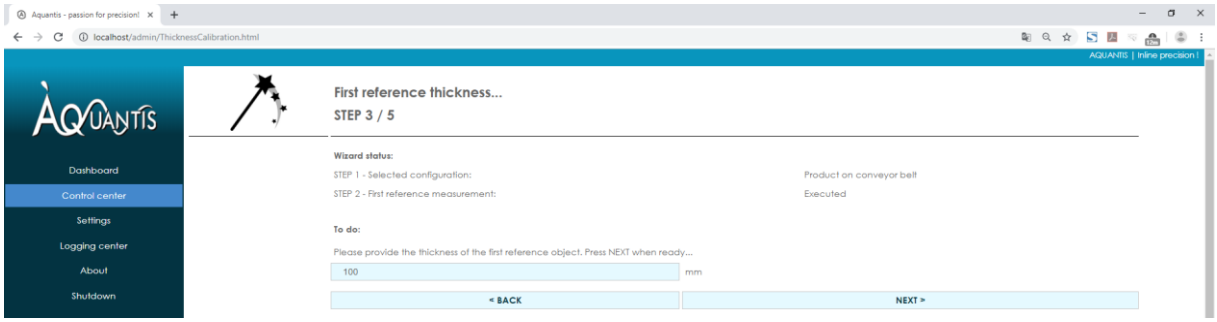

FIGURE 13: THICKNESS SENSOR CALIBRATION WIZARD - THICKNESS INPUT OF REFERENCE 1.

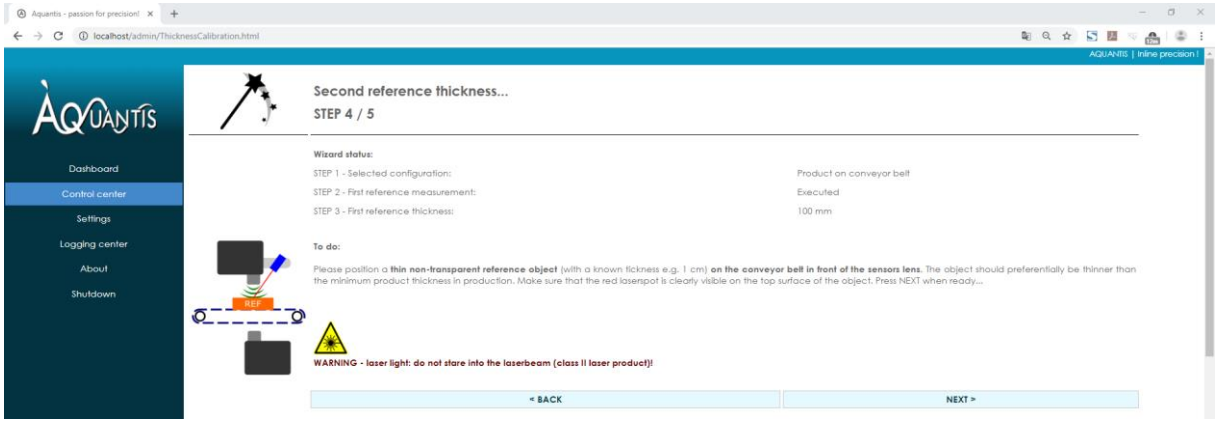

FIGURE 14: THICKNESS SENSOR CALIBRATION WIZARD - REFERENCE 2.

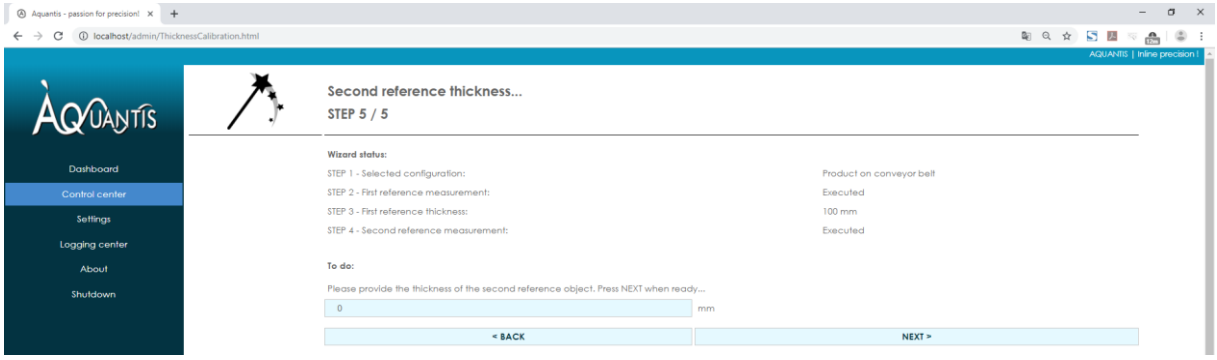

FIGURE 15: THICKNESS SENSOR CALIBRATION WIZARD - THICKNESS OF REFERENCE 2.

8.3.1.3 NO PRODUCT calibration

The calibration of the main sensor is mandatory before using the sensor. Preventing doing this step will result in incorrect sensor data.

- Empty the conveyor belt of all products or product parts. Important here is that the conveyor belt is completely dry.
- Click on the NO PRODUCT calibration button in the logging centre (Figure 16). This automatically calibrates the sensor during a few seconds.

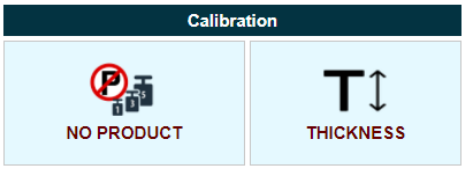

FIGURE 16: CALIBRATION - NO PRODUCT BUTTON

8.3.1.4 TCP/IP Settings

Protection level: freely accessible.

The TCP/IP settings page shows the current IP and MAC address. A static IP address will be active unless DHCP is used to attribute the IP address automatically.

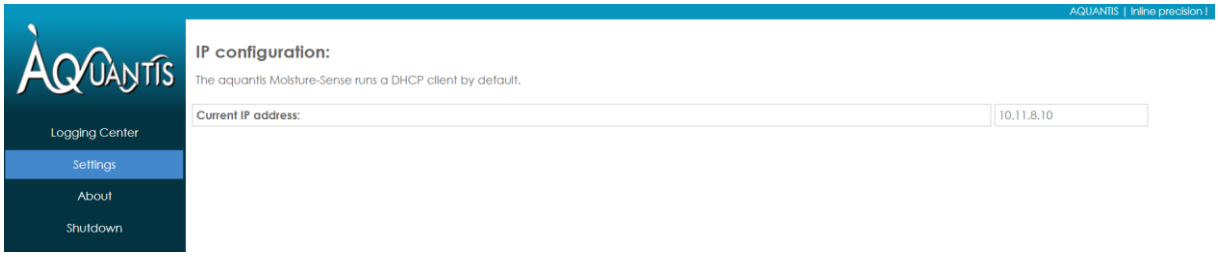

FIGURE 17: TCPIP SETTINGS PAGE.

8.3.1.5 About

Protection level: freely accessible.

The about-page contains basic information about the sensor as well as a download-link to the user-manual.

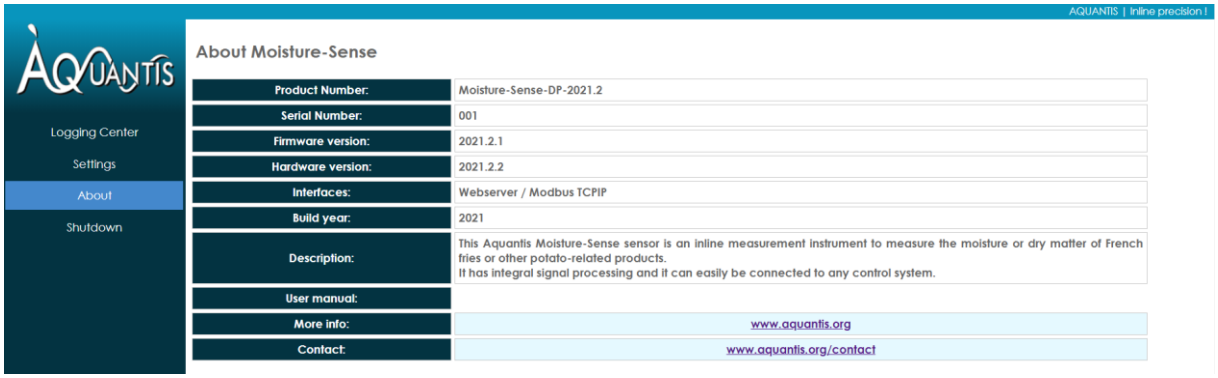

FIGURE 18: ABOUT PAGE.

Modbus TCP/IP interface

8.3.2.1 Introduction

Interoperability between the Aquantis system and external systems is provided through Modbus over TCP/IP. The Modbus server runs on standard port 502.

Through Modbus, data can be read, and some functions can be configured. Data reads are performed through the Read Holding Registers (0x03) data function, while data writes are performed either through Write Single Register (0x06), or through Write Multiple Registers (0x10).

All register addresses not mentioned here are either reserved or for internal use, do not depend on their value unless instructed to do so. Writes to registers other than those mentioned in the section "Write Operations" can cause the device to malfunction and cease working.

8.3.2.2 Operations

TABLE 1: MODBUS TCP/IP COMMANDS.

Function	Address	Unit	Data Type	Description
Error state	0x00	None	unsigned 16-bit integer	Bitmap of error flags. When a bit is set to 0, no error state is present. A bit set to 1 means that submodule or system is in an error state. A total value of 0 therefore means no errors are set. Bits are named in a manner where 0 is the least significant bit and 15 the most significant bit. Errors are non-latching and self-clear when applicable. Bit 0 reserved Bit 1 Temperature sensor status Bit 2 Thickness sensor status Bit 3 reserved Bit 4 reserved Bit 5 reserved Bit 6 reserved Bit 7 reserved Bit 8 system starting Bit 9 reserved Bit 10 reserved Bit 11 reserved Bit 12 reserved Bit 13 reserved Bit 14 reserved Bit 15 reserved

Function	Address	Unit	Data Type	Description
Watchdog	0x01	Count	Unsigned 16-bit integer	Number of seconds since the application was started, modulo 65536.
Thickness	0x06	mm	Unsigned 16-bit integer	Calculated thickness averaged over 1 second.
Mean Thickness	0x11	mm	Unsigned 16-bit integer	Calculated thickness averaged over 60 seconds.
Surface Temperature	0x12	0.1°C	Signed 16-bit integer	Surface temperature, averaged over 1 second.
Mean Surface Temperature	0x13	0.1°C	Signed 16-bit integer	Surface temperature, averaged over 60 seconds.
Dry Matter Model 1	0x20	0.1%	Unsigned 16-bit integer	Dry matter model 1 output (Cut size: 10x10, 12x12, CRC).
Dry Matter Model 2	0x21	0.1%	Unsigned 16-bit integer	Dry matter model 2 output (Cut size: 7x7).
Dry Matter Model 3	0x22	0.1%	Unsigned 16-bit integer	Dry matter model 3 output (Cut size: Sauté).
Mean Dry Matter Model 1	0x30	0.1%	Unsigned 16-bit integer	Mean dry matter model 1 output (Cut size: 10x10, 12x12, CRC) averaged over 60 seconds.
Mean Dry Matter Model 2	0x31	0.1%	Unsigned 16-bit integer	Mean dry matter model 2 output (Cut size: 7x7) averaged over 60 seconds.
Mean Dry Matter Model 3	0x32	0.1%	Unsigned 16-bit integer	Mean dry matter model 3 output (Cut size: Sauté) averaged over 60 seconds.

9 Maintenance & Disposal

Aquantis sensors are designed to provide many years of service in the field. To assure the system performs at its highest accuracy, the sensor should be kept in good conditions.

9.1 Daily maintenance

On a daily base, the Moisture-Sense, infrared temperature, and laser distance sensor windows should be dry and clean to get the best measurement results. Dust, dirt or drops of liquid can impair the measurement result and in worst case cause wrong measurement results. No specific tools nor material are supplied for daily maintenance. No chemicals can be used which are not compatible with polytetrafluoroethylene (PTFE) or stainless steel (AISI 304) materials.

9.2 Yearly maintenance

A yearly maintenance is mandatory to guarantee proper system performance during the 10-year life expectancy of the Moisture-Sense. No specific tools nor material are supplied for yearly maintenance. Only Aquantis engineers or Aquantis-certified engineers can conduct the yearly maintenance and/or repair the Moisture-Sense sensor. The maintenance certification can be obtained after training given by Aquantis. Contact Aquantis for more information.

9.3 Disposal

The device can be disposed by removing the individual units from their frame and returning them to Aquantis on one of the contact addresses. During removal, the units should not be opened.

10 Troubleshooting

10.1 Unexpected stop and restart

In case the system or a part of the system stopped working, the following steps needs to be followed:

1. Open the web interface.
2. Check if all product and operational parameters are set correctly.
3. Recalibrate by means of the NO PRODUCT buttons (see section 8.3.1.3) and thickness sensors using the calibration wizards (see section 8.3.1.2 Thickness sensor calibration wizard).
4. Try to shut down the system using the webserver's shutdown-button. In case this doesn't work, turn off the power, wait for at least 60 seconds and restart the system. Avoid hard restarts as much as possible since this may affect the proper functioning of the device.
5. In case step 4 does not resolve the issue (ex. by an unexpected power outage of the factory), one can manually switch off the industrial PC inside the computing box by holding on the power button of the PC for 10 seconds. This button is located on right top corner of the industrial PC (black). If the PC is on, the button lights up in green. Once the PC is shut down, the green light will go off. After switching off the industrial PC successfully, the operator can turn it back on by pressing on the power button shortly.
6. Contact Aquantis if the above steps didn't solve the problem.

10.2 Sensor warnings and errors

The web interface indicates warnings or errors in the top-right corner of the web interface (Figure 19). The error message is shown upon hovering on the warning or error icon.

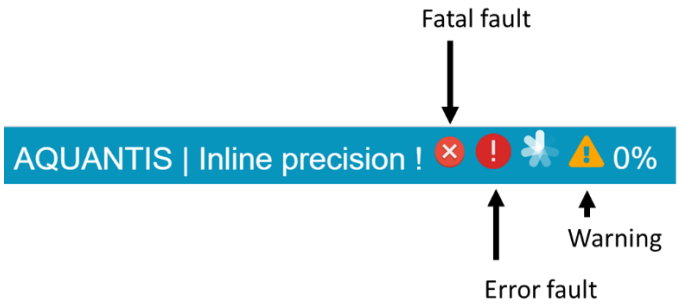

FIGURE 19: WARNING AND ERROR INDICATORS IN THE WEB INTERFACE.

TABLE 2: WARNINGS AND ERRORS AND THEIR SOLUTIONS.

Notification	Error message	Solution
Warning	Connection with server lost.	• Check your network connection/cable. • Check the network connection/cable of the sensor. • Check if the sensor is *on* by checking if the laser of the thickness sensor is on or the indicator light of the temperature sensor blinks.
	VNA data was produced at frequencies for which no calibration exists. Please calibrate.	• Go through the calibration wizard for the 'no product'.
Error fault	No data has been generated by the thickness sensor for over 10 seconds.	• Ensure the window of the thickness sensor is clean. • Go through the calibration wizard for the thickness. • Please make sure the distance between belt and thickness sensor is less than 40 cm. • If the problem persists, please contact Aquantis.
Error fault	No data has been generated by the IR temp sensor for over 10 seconds.	• Ensure the window of the IR temperature sensor is clean. • If the problem persists, please contact Aquantis.
Fatal fault	Cannot open IR temp sensor serial port COM18.	• Immediately contact Aquantis

10.3 Returns

For efficient processing and finding the cause of the fault, include the following information when returning:

- Details of a contact person
- Description of the application
- Description of the fault which occurred.

10.4 Repairs

Repairs of the sensor are only carried out by Aquantis or Aquantis-certified engineers. Contact Aquantis for the repair of the sensor. Any manipulation or modification of the sensor can result in additional costs.

11 Technical data

11.1 General specifications

- Moisture range 60 – 90% *
- Measuring precision ±1% *
- Operating temperature: –40 °C to +40 °C

11.2 Electrical specifications

- Power Order of 10 dBm
- Frequency bands 2.4 – 2.5 GHz and 5.725 – 5.875 GHz
- Dynamic range ~60dB
- Output Waveguide-based HF emission
- Input AC Single Phase 100-240V~ 0.5A 50-60 Hz

11.3 Data connectivity / acquisition

- Sampling rate 500 Hz
- Ethernet RJ45 plug
- Industrial interface MODBUS TCP/IP server
- Web-server based user interface Remote interaction with the sensor via a browser
- DHCP client Automatic negotiation of IP address

11.4 Mechanical specifications

Materials

Sensor body	Hygienic food-grade stainless steel housing (AISI 304), IP66
Cable glands	Hygienic food-grade stainless steel cable glands
EM output cap	PE & PTFE
Fixation	Stainless steel spacers M10, M6 and M4

Computer-box

Weight: order of magnitude of 20 kg

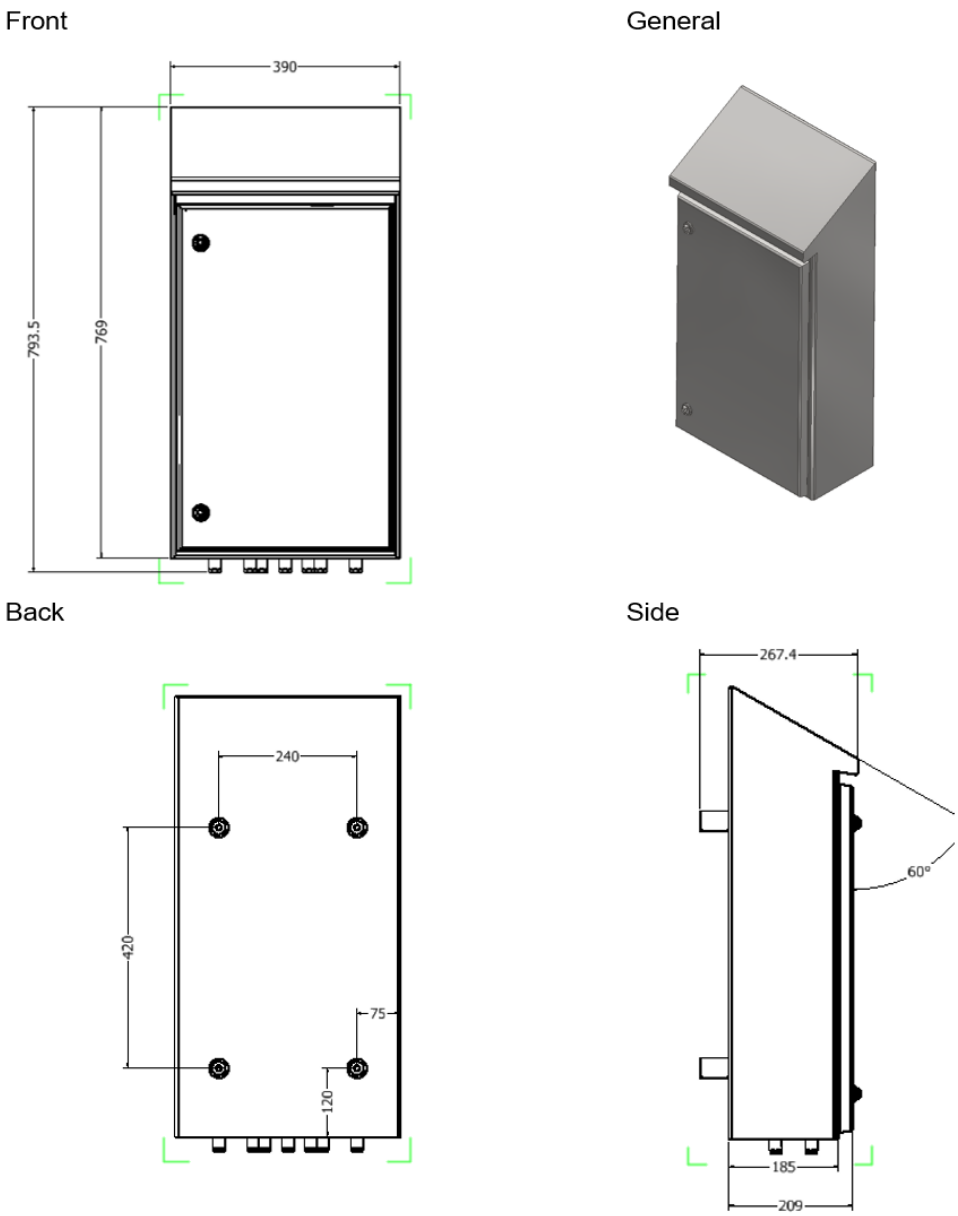

FIGURE 20: COMPUTER UNIT OUTER DIMENSIONS.

HF measurement units

Figure 21 shows the outer dimensions of both the emitter.

Weight per unit: order of magnitude of 15 kg

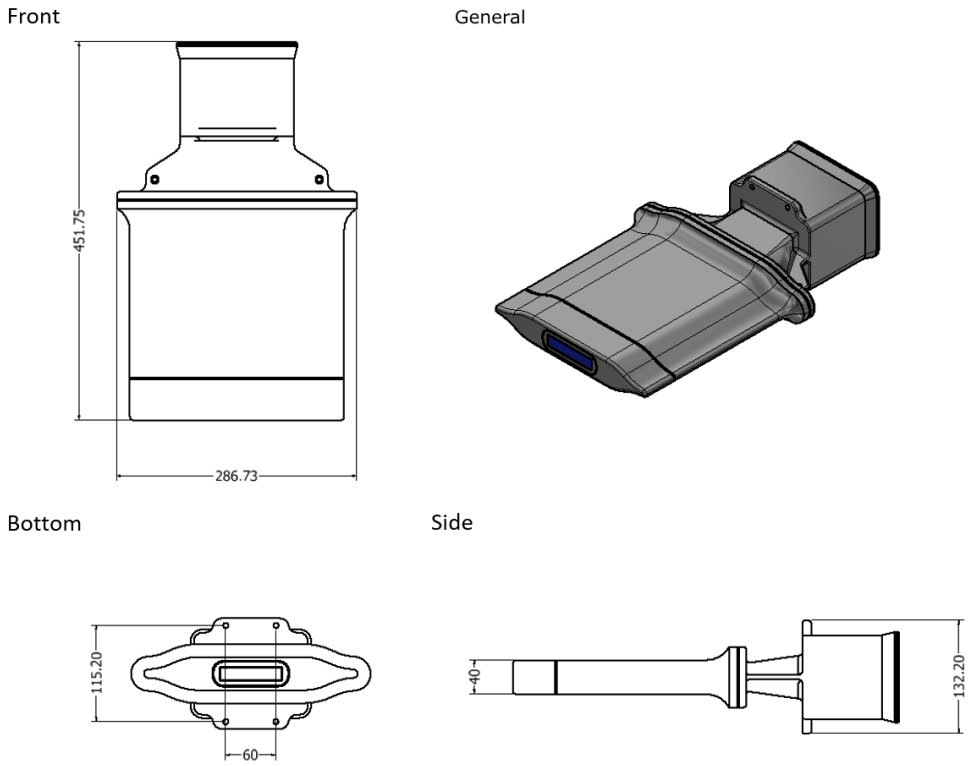

FIGURE 21: EMITTER UNIT OUTER DIMENSIONS.

Figure 22: Receiver unit outer dimensions.shows the outer dimensions of the receiver.

Weight per unit: order of magnitude of 5 kg

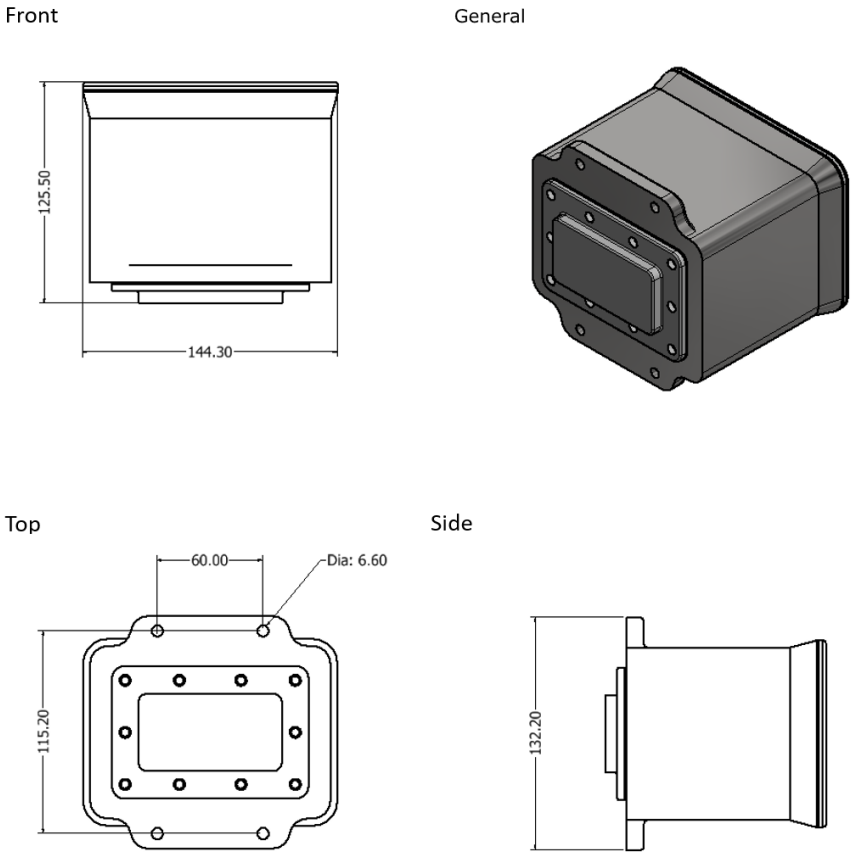

FIGURE 22: RECEIVER UNIT OUTER DIMENSIONS.

Supporting mechanical pieces

Figure 23: Figure 22: Receiver unit outer dimensions. outer dimensions.

Weight per unit: order of magnitude of 5 kg

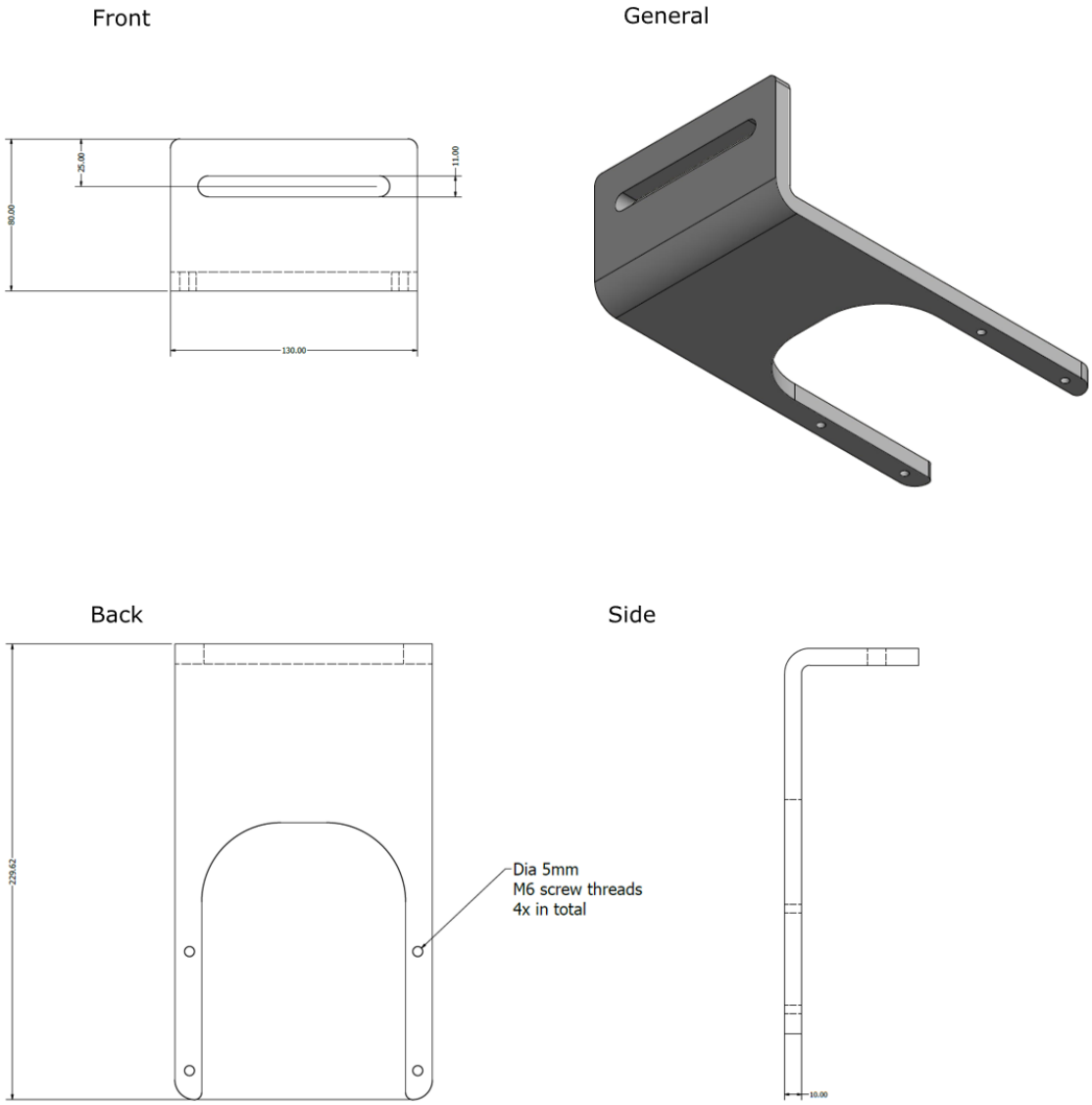

FIGURE 23: L-PIECE SUPPORT FOR RECEIVER

Figure 24: L-piece support for emitterSupport L-piece for the emitter outer dimensions.

Weight per unit: order of magnitude of 5 kg

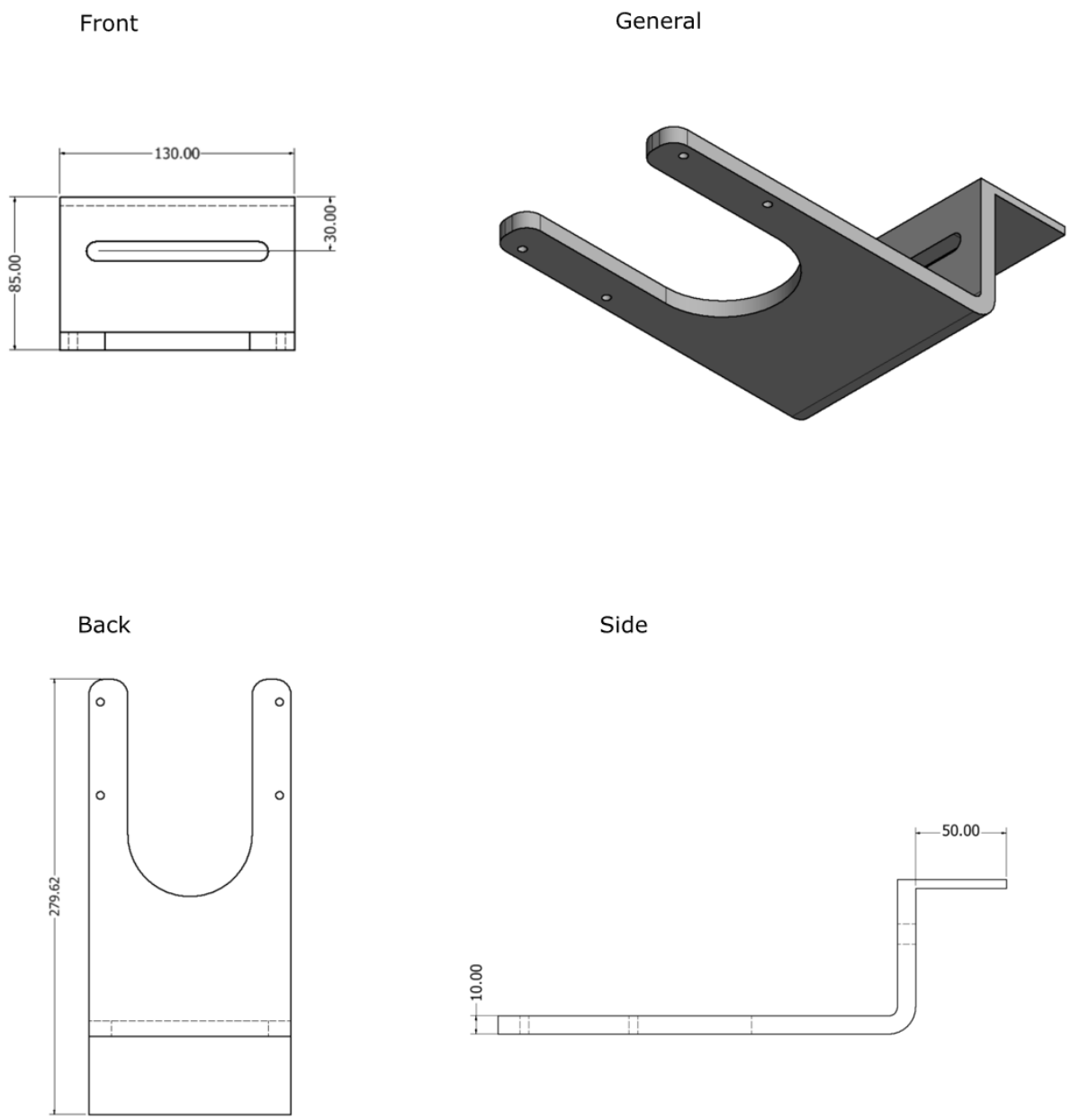

FIGURE 24: L-PIECE SUPPORT FOR EMITTER

Figure 25: Horizontal holder for peripheral sensorsHorizontal holder for peripheral sensors outer dimensions.

Weight per unit: order of magnitude of 2 kg

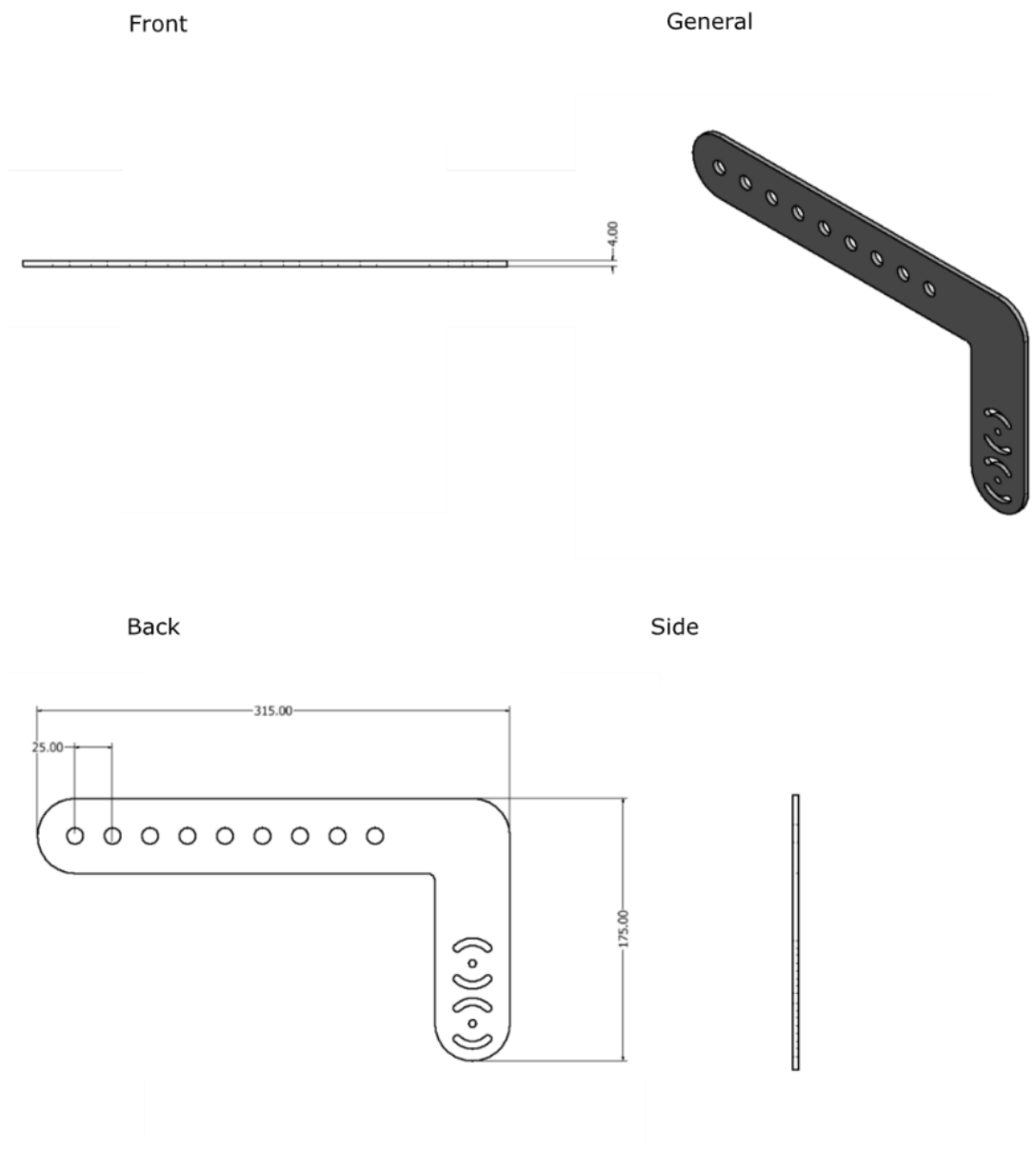

FIGURE 25: HORIZONTAL HOLDER FOR PERIPHERAL SENSORS

Figure 26Figure 22: Receiver unit outer dimensions.Angled bracket for peripheral sensors outer dimensions.

Weight per unit: order of magnitude of 1 kg

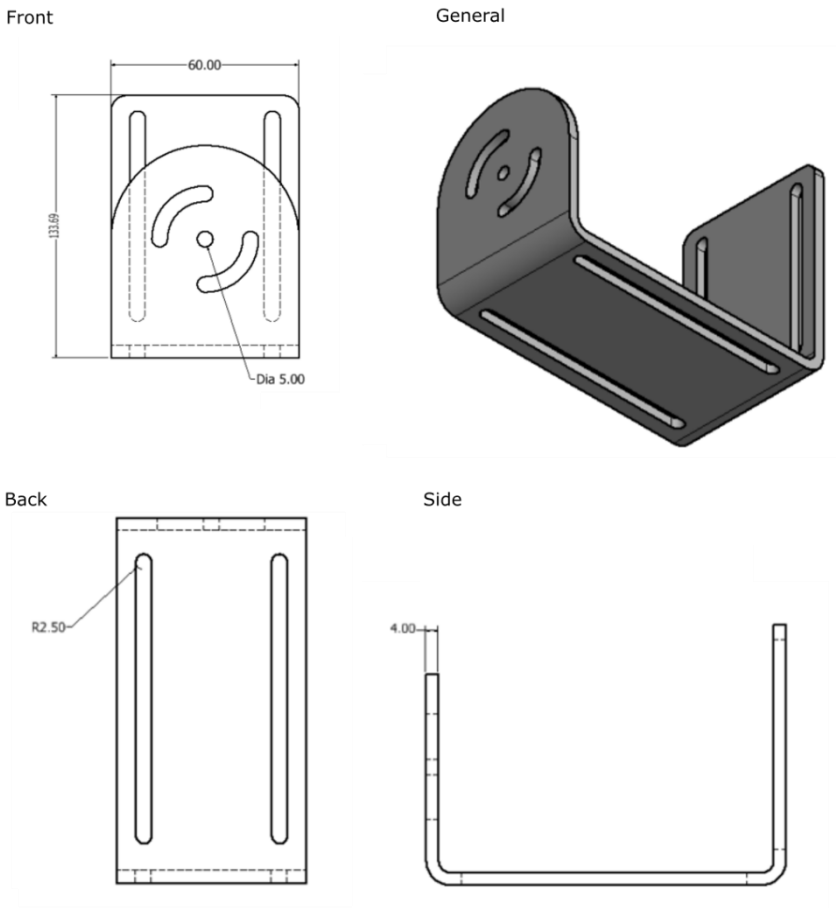

FIGURE 26: ANGLED BRACKET FOR PERIPHERAL SENSORS

Assembled sensor.

Figure 27 demonstrates the assembled sensor. The screws and nuts needed for assembly are also indicated.

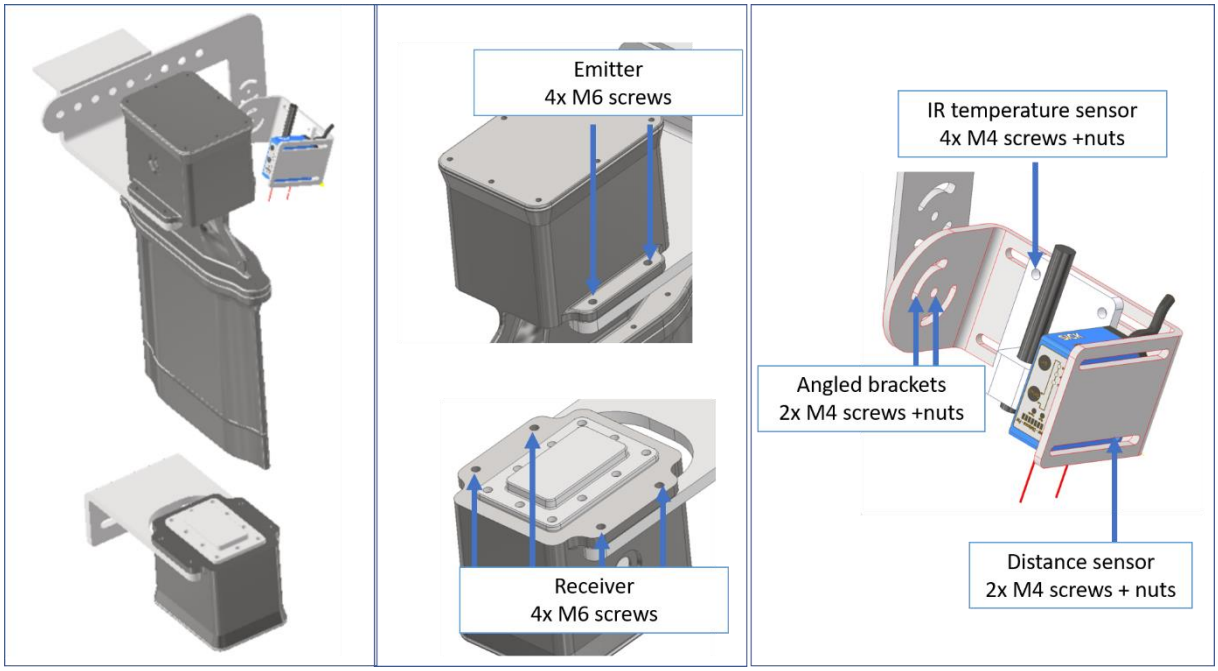

FIGURE 27: ASSEMBLED MOISTURE-SENSE AND THE SCREWS USED FOR ASSEMBLY